Data sheet | Item number: 232-871

THT female header; 0.6 x 1.0 mm solder pin; angled; Pin spacing 7.62 mm; 11-pole

232-871

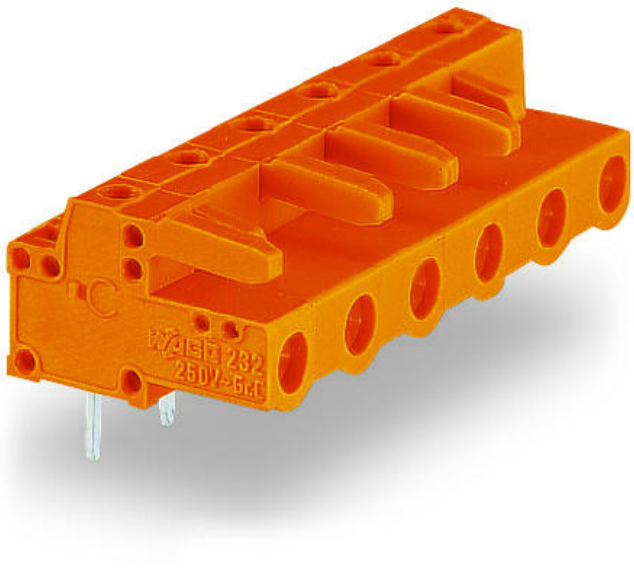

RoHS ✓ Compliant

BOMcheck.net

Color:

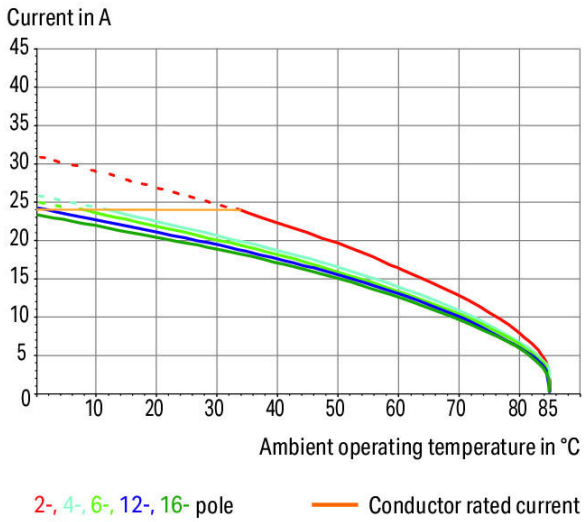

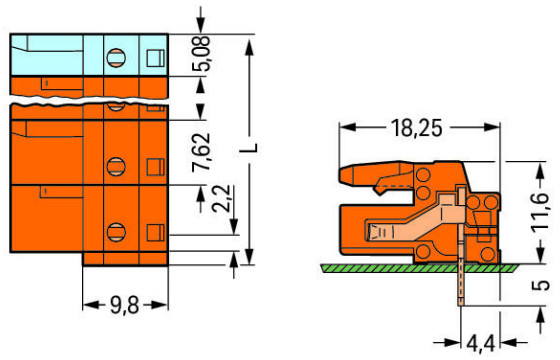

L = (pole no. – 1) x pin spacing + 5.08 mm + 1.5 mm

Distance to first solder pin: 2.2 mm

2- to 3-pole female connectors – one latch only

Item description

- Horizontal or vertical PCB mounting via straight or angled solder pins
- For board-to-board and board-to-wire connections
- Touch-proof PCB outputs
- Easy-to-identify PCB inputs and outputs
- With coding fingers

Safety information 1:
The *MULTI CONNECTION SYSTEM (MCS)* is designed without breaking capacity for compliance with DIN EN 61984. When used as intended, MCS Connectors shall not be connected/disconnected when live or under load. The circuit design should ensure header pins, which can be touched, are not live when unmated.

Data
Electrical data

Ratings per IEC/EN 60664-1

Rated voltage (III / 3)	500 V
Rated impulse voltage (III / 3)	6 kV
Rated voltage (III / 2)	630 V

Rated impulse voltage (III / 2)	6 kV
Rated voltage (II / 2)	1000 V
Rated impulse voltage (II / 2)	6 kV
Rated current	12 A

Approvals per UL 1059

Rated voltage UL (Use Group B)	300 V
Rated current UL (Use Group B)	15 A
Rated voltage UL (Use Group D)	300 V
Rated current UL (Use Group D)	10 A

Approvals per UL 1977

Rated voltage per UL 1977 (factory wiring only)	600 V
Rated current per UL 1977 (factory wiring only)	15 A

Approvals per CSA

Rated voltage CSA (Use Group B)	300 V
Rated current CSA (Use Group B)	15 A
Rated voltage CSA (Use Group D)	300 V
Rated current CSA (Use Group D)	10 A

Connection data

No. of poles	11
Total number of potentials	11
Number of connection types	1
Number of levels	1

Geometrical Data

Pin spacing	7.62 mm / 0.3 inch
Width	82.78 mm / 3.259 inch
Height	16.6 mm / 0.654 inch
Height from the surface	11.6 mm / 0.457 inch
Depth	18.25 mm / 0.719 inch
Solder pin length	5 mm
Solder pin dimensions	0.6 x 1 mm
Drilled hole diameter (tolerance)	$1.3^{(- \dots +0.1)}$ mm

Plug connection

Contact type (pluggable connector)	Female connector/socket

Connector connection type	for PCBs
Mismating protection	No
Mating direction to the PCB	0 °

PCB contact

PCB contact	THT
Solder pin arrangement	over the entire female connector, in line
Number of solder pins per potential	1

Material Data

Color	orange
Material group	I
Insulating material	Polyamide 66 (PA 66)
Flammability class per UL94	V0
Contact material	Copper alloy
Contact plating	tin-plated
Fire load	0.237 MJ
Weight	12.15 g

Environmental Requirements

Limit temperature range	-60 … +85 °C

Commercial data

Product Group	3 (Multi Conn. System)
Country of origin	DE
GTIN	4044918580335
Customs Tariff No.	85366990990

Approvals / Certificates

Country specific Approvals

Logo	Approval	Additional Approval Text	Certificate name
	CB DEKRA Certification B.V.	IEC 61984	NL-39756
	KEMA/KEUR DEKRA Certification B.V.	EN 61984	2190761.01

Ship Approvals

Logo	Approval	Additional Approval Text	Certificate name

	ABS American Bureau of Shipping	-	14-HG1241537-PDA
	DNV GL Det Norske Veritas, Germanischer Lloyd	-	TAE000016Z

UL-Approvals

Logo	Approval	Additional Approval Text	Certificate name
	UR Underwriters Laboratories Inc.	UL 1059	E45172
	UR Underwriters Laboratories Inc.	UL 1977	E45171

Compatible products

check

	Item no.: 210-136 Test plug; 2 mm Ø; with 500 mm cable	210-136
	Item no.: 210-137 Test plug; 2.3 mm Ø; with 500 mm cable	210-137
	Item no.: 231-662 Test plugs for female connectors; for 7.5 mm and 7.62 mm pin spacing	231-662

Marking accessories

	Item no.: 210-833 Marking strips; on reel; 6 mm wide; plain; Self-adhesive	210-833
	Item no.: 210-834 Marking strips; on reel; 5 mm wide; plain; Self-adhesive	210-834

Downloads

CAD/CAE - Smart Data

CAD data

3D Download 232-871	URL	Download

PCB libraries

EAGLE Library for WAGO Pluggable PCB Connectors (MULTI CONNECTION SYSTEM) Compatible with EAGLE PCB Design Software Version 6.x or higher	2.1 Oct 6, 2014	zip 6.2 MB	Download
TARGET Library for WAGO Pluggable PCB Connectors (Multi-Connection System) Compatible with TARGET PCB Design Software Version 17.x	1.1.0 Oct 6, 2014	zip 7.4 MB	Download
DesignSpark Library for WAGO Pluggable PCB Connectors (MULTI CONNECTION SYSTEM) Compatible with DesignSpark PCB Version 4.x or higher	2.1 Oct 6, 2014	zip 6.1 MB	Download

Subject to changes.